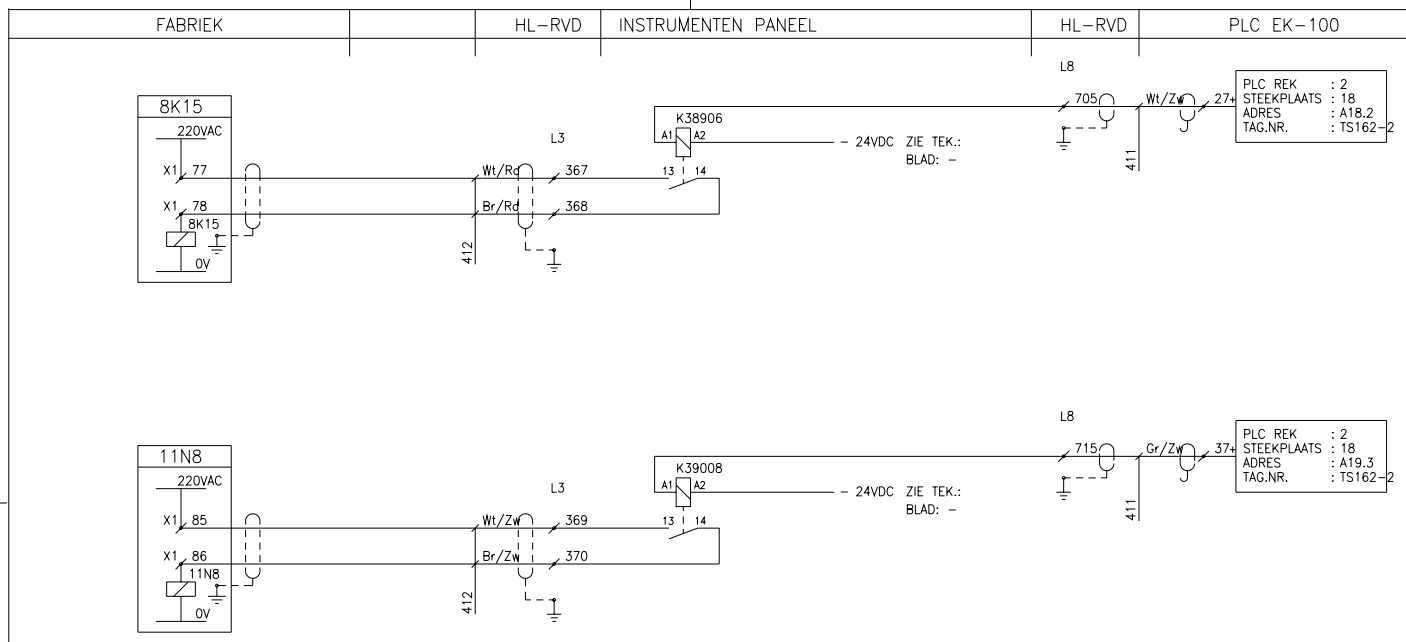

Rev.:	Date:	Disription:	Drawn by:	Ckd:	Seen by:
A	15-12-1994	AS BUILT	R.B.	J.S.	J.Li.
0	08-09-1994	FOR APPROVAL	M.V.	J.S.	J.Li.

HVL ELEKTROTECHNIEK
POSTBUS 1341
6201 BH MAASTRICHT
043-619090

Client: LB METREX B.V.
Project: WARME STRAAT
Title: HOOK-UP TEMPERATUUR IN BRANDER BED
Tag number: TE162-3

Drawn by:	Filenumber:	Scale:	Size:	Ordernumber:	Sub.:	Drawing number:	Sht.:	of:	Rev.
M.V. 08-09-1994	4162-3	- : -	A3	9580	00	T162-3	0000	0000	A

TAG Nr.:	Fabrikaat en Type:	Spec./Magn.Nr	Instelling	Meetbereik	Opm./Tek.
11N8	BEDRIJFSTEMPERATUUR IN 800°C / UIT 850°C				
8K15	OVERBRUGGING SPOELEN (TE162-2 750°C)				

Demo Version